SNOWFAN

DC 离心机风扇
YY10025 SERIES

轴承结构：双滚珠
Bearing system: Two Ball
外框材质：环保防火PPS UL 94V-0
Frame: Thermoplastic PPS UL 94V-0
扇叶材质：塑胶 (UL 94V-0)
Impeller: Plastic (UL 94V-0)
风扇单重：121.2g (Weight: 121.2g)

E341576

P&Q曲线(在额定电压下) P&Q CURVE (AT RATEDVOLTAGE)

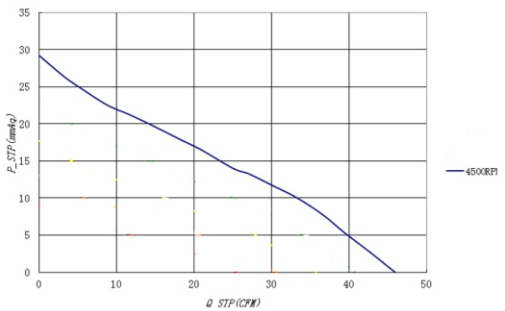

尺寸图 DIMENSIONS DRAWING

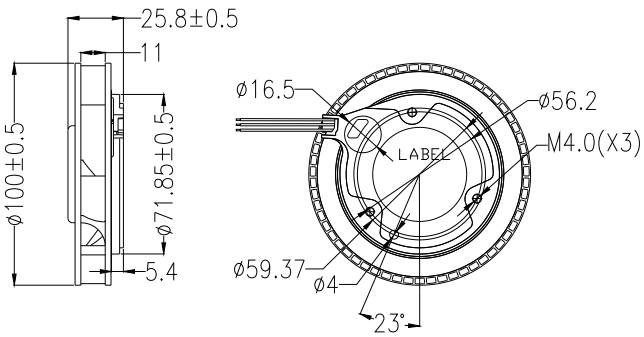

马达可选功能列表(Available Functions)

1.马达保护 (Motor protection)

RP	SS	LP	CL	OVP
●	●	●	●	○

2.信号输出（Signal out put)

FG	RD	RDB	LD
●	●	●	●

3.调速方式(Speed control mode)

PWM	TC	VC	CC	CS
●	●	●	●	●

MODEL	Rated Voltage	Operating Voltage Range	Rated Current	Rated Input Power	Speed	Maximum Air Flow		Maximum Air Pressure		Noise
型 号	额定电压	工作电压范围	额定电流	额定输入功率	转速	最大风量		最大风压		噪 音
ART NO.	VDC	VDC	Amp	Watt	R.P.M	CMM	CFM	mmH2O	INH2O	DB-A
YY10025H12	12	7.0to13.5	0.53	6.36	4500	1.30	45.96	19.69	1.15	53.3
YY10025H24	24	18to26.5	0.27	6.48						

如果您需要的转速或电压或功能不在这清单上，请与我们业务联系。 If you want another rpm or voltage or functions which one in the list. please contact with our sales.

提示1：功能的具体信息参照产品目录前页篇章。
Notes 1 : The catalog have detail information in the front page for the functions.

提示2：产品详细信息请参照承认书。
Notes 2 : Product have a detail in the approval sheet.

提示3：产品规格变更不另行通知。
Notes 3 :Specifications are subject to change without notice.